DIAGRAM OF DKTIPIN50

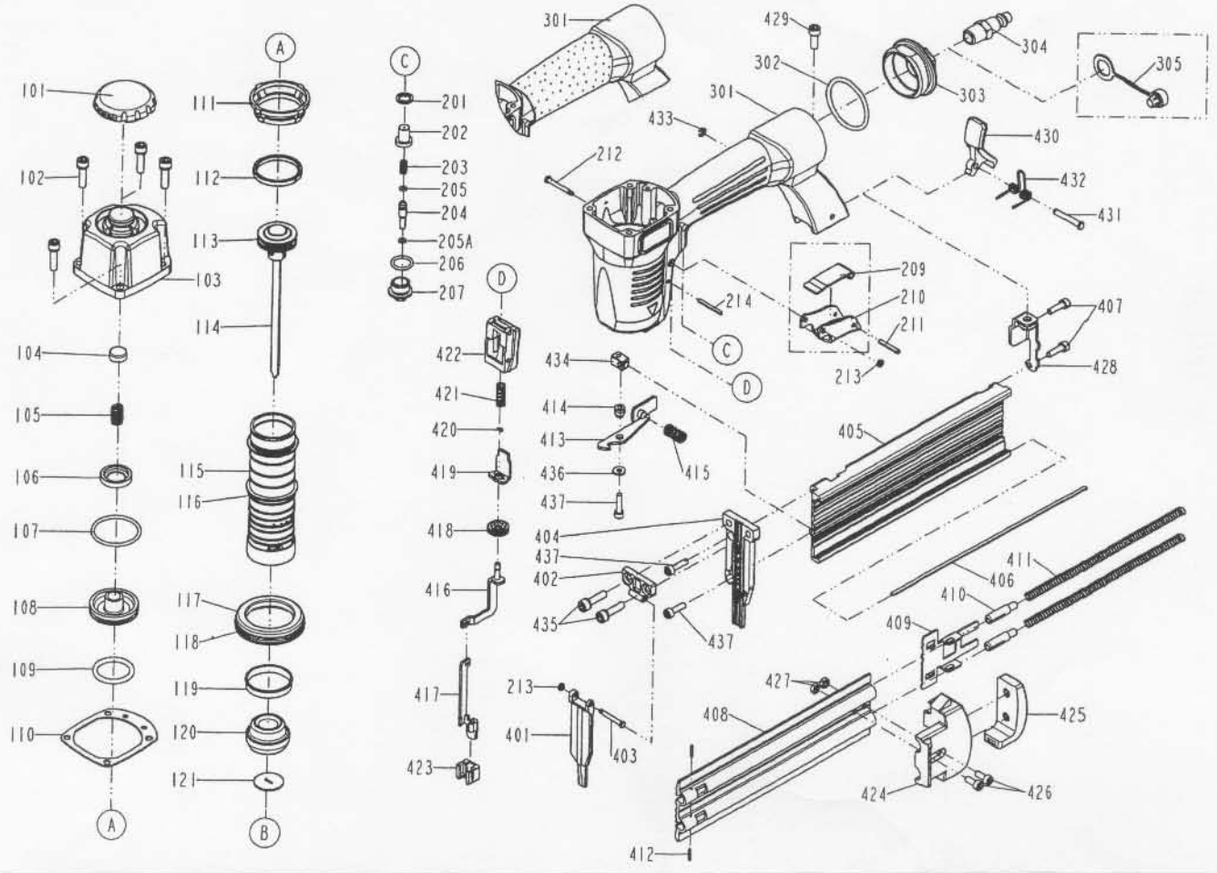

ITEM NO.	PART NO.	DESCRIPTION	ITEM NO.	PART NO.	DESCRIPTION	ITEM NO.	PART NO.	DESCRIPTION
101	11371-0264702-1	DEFLECTOR	213	1131D-0460001-1	URETHANE RETAINER	427	2040501-02010-0	NUT
102	2040100-03030-0	BOLT ASSY	214	2040400-05130-0	SPRING PIN	428	11323-0394704-1	BRACKET
103	11369-0395301-1	CAP	301	11230-0265201-1	GUN BODY UNIT	429	2040101-03060-0	HEX.SOC.HD.BOLT
104	11370-0010003-1	SEAL	302	2041109-04060-0	O - RING	430	11343-0264701-1	LATCH
105	11360-0010001-3	COMPRESSION SPRING	303	11346-0014707-1	END CAP	431	11344-0394701-1	LATCH PIN
106	1131P-0394701-1	OIL SEAL	304	1135V-0000007-1	AIR PLUG	432	11315-0260001-1	SPRING
107	2041108-04040-0	O - RING	305	1132L-0010001-1	AIR PLUG CAP	433	2040302-23010-0	E - RING
108	11368-0390001-1	HD.VALVE PISTON	401	11352-0394705-3	DRIVER GUIDE COVER A	434	1131F-0264701-1	ANCHOR BLOCK
109	2041108-03080-0	O - RING	402	11353-0264701-1	DRIVER GUIDE COVER B	435	2040100-03030-2	BOLT ASSY
110	1132M-0264701-2	PACKING	403	11324-0264701-1	FIXED PIN	436	2040202-02020-0	FLAT WASHER
111	11399-0394701-2	COLLAR	404	11303-0394707-3	DRIVER GUIDE	437	2040101-02080-0	HEX.SOC.HD.BOLT
112	11350-0390001-1	PISTON RING	405	11389-0394703-2	MAGAZINE A			
113	2041105-03030-0	O - RING	406	11377-0014701-1	FLAT BAR			
114	11204-0390010-1	DRIVER UNIT	407	2040101-02070-0	HEX.SOC.HD.BOLT			
115	11320-0390006-3	CYLINDER	408	11391-0394703-2	MAGAZINE B			
116	2041105-04020-0	O - RING	409	11363-0394701-1	PUSHER			
117	11321-0394701-1	CYLINDER SPACER	410	11378-0261101-1	SHAFT			
118	2041102-05010-0	O - RING	411	11367-0264701-1	PUSHER SPRING			
119	11322-0394701-1	CYLINDER RING	412	2040400-03050-0	SPRING PIN			
120	11327-0264701-3	BUMPER	413	1135Y-0394701-1	LATCH			
121	11388-0394702-1	DRIVER GUIDE	414	1133V-0264701-1	MAGAZINE SPACER			
201	1133R-0010001-1	SEAL	415	11313-0394701-1	LOCK.SPRING			
202	11373-0010002-2	TRIGGER VALVE HEAD	416	11332-0394701-2	SAFETY B			
203	1133U-0014701-1	SPRING	417	11331-0394701-1	SAFETY A			
204	11375-0154701-1	PLUNGER	418	11393-0264701-2	ADJUST AXIE			
205	2041102-01030-0	O - RING	419	11330-0684702-2	SAFETY			
205A	2041102-01031-0	O - RING	420	1131C-0664701-1	RING			
206	2041105-02010-0	O - RING	421	11337-0264701-1	SAFETY SPRING			
207	11374-0264701-1	PLUNGER CAP	422	11338-0684701-3	SAFETY GUIDE			
209	1131S-0014701-1	SAFETY	423	11339-0264701-1	PROTECTIVE CASING			
210	11316-0684701-1	TRIGGER	424	11347-0394703-1	REAR PLATE			
211	2040400-04080-0	SPRING PIN	425	11390-0394701-1	PROTECTING HOOD COVER			
212	11318-0084701-1	TRIGGER PIVOT PIN	426	2040101-02040-0	HEX.SOC.HD.BOLT			